THIS REPORT HAS BEEN DELIMITED
AND CLEARED FOR PUBLIC RELEASE
UNDER DOD DIRECTIVE 5200.20 AND
NO RESTRICTIONS ARE IMPOSED UPON
ITS USE AND DISCLOSURE.

DISTRIBUTION STATEMENT A

APPROVED FOR PUBLIC RELEASE;
DISTRIBUTION UNLIMITED.

UNCLASSIFIED

AD 450460

DEFENSE DOCUMENTATION CENTER

FOR

SCIENTIFIC AND TECHNICAL INFORMATION

CAMERON STATION ALEXANDRIA, VIRGINIA

UNCLASSIFIED

NOTICE: When government or other drawings, specifications or other data are used for any purpose other than in connection with a definitely related government procurement operation, the U. S. Government thereby incurs no responsibility, nor any obligation whatsoever; and the fact that the Government may have formulated, furnished, or in any way supplied the said drawings, specifications, or other data is not to be regarded by implication or otherwise as in any manner licensing the holder or any other person or corporation, or conveying any rights or permission to manufacture, use or sell any patented invention that may in any way be related thereto.

450460

SEG TDR 64-30

CATALOGED BY DDC
AS AD No.

SUMMARY OF THE AEROTHERMOELASTIC DEVELOPMENT PROGRAM FOR THE X-20A (DYNA-SOAR)

WELDON R. BAIRD, MAJOR, USAF

TECHNICAL DOCUMENTARY REPORT No. SEG TDR 64-30

SEPTEMBER 1964

DDC
RECEIVED
NOV 6 1964
DDC-IRA A

X-20 ENGINEERING OFFICE
SYSTEMS ENGINEERING GROUP
RESEARCH AND TECHNOLOGY DIVISION
AIR FORCE SYSTEMS COMMAND
WRIGHT-PATTERSON AIR FORCE BASE, OHIO

System 620A

450460

NOTICES

When Government drawings, specifications, or other data are used for any purpose other than in connection with a definitely related Government procurement operation, the United States Government thereby incurs no responsibility nor any obligation whatsoever; and the fact that the Government may have formulated, furnished, or in any way supplied the said drawings, specifications, or other data, is not to be regarded by implication or otherwise as in any manner licensing the holder or any other person or corporation, or conveying any rights or permission to manufacture, use, or sell any patented invention that may in any way be related thereto.

Qualified requesters may obtain copies of this report from the Defense Documentation Center (DDC), (formerly ASTIA), Cameron Station, Bldg. 5, 5010 Duke Street, Alexandria, Virginia, 22314.

Foreign announcement and dissemination of this report by the Defense Documentation Center is not authorized.

Copies of this report should not be returned to the Research and Technology Division, Wright-Patterson Air Force Base, Ohio, unless return is required by security considerations, contractual obligations, or notice on a specific document.

200 - October 1964 - 448-9-270

FOREWORD

This report, prepared by the X-20 Engineering Office, summarizes the efforts and progress made in the aerothermoelastic development program for the X-20A (Dyna-Soar) space glider. The work reported, in the main, was conducted by the system contractor, The Boeing Company, Seattle, Washington, under contract AF 33(657)-7132. The development of the X-20 started with contract award in May 1960 and terminated by direction of the Secretary of Defense in December 1963.

Foreign announcement and dissemination is not authorized in accordance with AF Letter 200-1.

ABSTRACT

This report summarizes the aerothermoelastic development status of the X-20A (Dyna-Soar) at the time the program was terminated, December 1963. Analytical and test techniques for lifting surface flutter, control surface buzz, panel flutter, and air vehicle flutter are discussed. While analysis and limited scale testing indicated a satisfactory design, necessary development testing to verify the design had not been completed. One exception was in the area of panel flutter where high confidence existed in success. Re-entry temperatures did not appear to be a significant direct concern from the point of view of flutter. The difficulty of employing control surface dampers apparently poses a special concern for designers of re-entry vehicles employing aerodynamic control surfaces.

This technical documentary report has been reviewed and is approved.

WILLIAM E. LAMAR
Director,
X-20 Engineering Office
Systems Engineering Group

TABLE OF CONTENTS

SECTION		PAGE
1	Introduction	1
2	Lifting Surface Flutter	1
3	Control Surface Single-Degree-Of-Freedom Flutter (Buzz)	10
4	Panel Flutter	11
5	Air Vehicle Flutter	17
6	Conclusions and Recommendations	19
References		21

LIST OF ILLUSTRATIONS

FIGURE		PAGE
1	Glider Stiffness Analysis	8
2	Typical Cantilever Mode of Glider	9
3	Single Element Mass Distribution	9
4	Typical Uninsulated Panel	14
5	Typical Insulated Panel	14
6	Upper Locations of Insulated and Uninsulated Panels	15
7	Lower Locations of Insulated and Uninsulated Panels	15
8	Panel Orientation Effect	16
9	Development of X-20A Skin Panels	16
10	X-20A/Titan IIIC Air Vehicle	18

LIST OF SYMBOLS

SYMBOL	DEFINITION	UNIT OF MEASURE
A	Air Force coefficients, real and imaginary	
a	speed of sound	ft/sec.
b	reference semi-chord	inches
c	superscript denoting cantilever	
E	modulus of elasticity	
e	Napierian root	
F	force or moment	lb or lb-in.
I	mass moment of inertia	lb-in.-sec.^{2}
i	$\sqrt{-1}$, subscript denoting matrix row number	
J	mass terms (a matrix)	
j	subscript denoting matrix column number	
K	generalized stiffness (a matrix)	
k	stiffness for an element	lb/in. or $\frac{\text{lb-in.}}{\text{rad}}$
k	reduced frequency parameter $\left(\frac{b\omega}{V}\right)$	
k_B	reduced buzz frequency parameter $\left(\frac{b\omega}{a}\right)$	
M	mass	
q	generalized coordinate or dynamic pressure (lb/ft^2)	
R	superscript denoting rigid body	
T	kinetic energy	
t	time	sec.
V	velocity	ft/sec.
δ	displacement	inches
$\dot{\delta}$	first time derivative of δ	
$\ddot{\delta}$	second time derivative of δ	

LIST OF SYMBOLS (Cont'd)

SYMBOL	DEFINITION	UNIT OF MEASURE
δ_o	amplitude	inches
ϕ	normalized mode shape	
ω	circular frequency	
$[\ ]$	rectangular matrix	
$[\ ]'$	transpose of matrix	
$[\ ]^{-1}$	inverse of matrix	
$[\ ]$	diagonal matrix	
$\lceil\ \rceil$	row matrix	
$\lfloor\ \rfloor$	column matrix	
θ	angular displacement	

SECTION 1
INTRODUCTION

The X-20A (Dyna-Soar) was to be a manned re-entry vehicle capable of controlled lifting re-entry as opposed to a ballistic re-entry. The final X-20, or Dyna-Soar, concept consisted of a delta wing glider that was to be boosted to orbital altitudes and velocities by a Titan III booster. It was then to re-enter the earth's atmosphere at about 320,000 feet and at approximately Mach 25. After a controlled glide, the X-20 would land in much the same fashion as conventional aircraft. The Boeing Company was selected as the system contractor in 1959 and actual development work began in 1960. The program was terminated in December 1963. The first manned orbital flight was scheduled for mid 1966.

There has been a continuing trend towards lighter, hence more flexible, airframe structures along with greatly improved performance. This trend has increased the likelihood of unfavorable mutual interaction between aerodynamic and elastic forces. The X-20 introduced a third important consideration — the effects of the thermal gradients and modulus changes that would be experienced on re-entry.

The X-20 was designed with a "hot" load carrying structure utilizing reradiation to prevent excessive temperatures and capable of relieving itself of thermal stresses. This concept presented many unique problems to the flutter engineer, some of which are discussed in this report. The specific areas reported upon are airframe or lifting surface flutter, panel flutter, buzz, and air vehicle flutter. The last term applies to the aeroelastic problems associated with the glider-booster combination.

The dynamic developments of interest to the flutter engineer are summarized. The general approach has been to stress the final concepts as they had evolved at the time the program was terminated. This report does not present details of either the experimental or the analytical data that have been developed by the program, although a brief description of the vibrational analysis is included to acquaint the reader with techniques. It is hoped that the reader can discern from this report what detailed data or information he may require from the references, which, for the most part,are classified. The Aerospace Division of The Boeing Company developed the analytical and experimental data included or referenced in this report.

SECTION 2
LIFTING SURFACE FLUTTER

GLIDER STIFFNESS ANALYSIS

The formulation of a stiffness analysis of the X-20A glider was essential to a flutter analysis as well as to the determination of aeroelastic loads, design and selection of a flight control system, investigation of aeroservoelastic effects, and determination of dynamic landing loads. Figure 1 is a flow chart of the stiffness analysis program.

Manuscript released by author 15 May 1964 for publication as an RTD Technical Documentary Report.

The stiffness analysis is described in Reference 1. The primary structure of the X-20A is a René super alloy truss system. The structure is pin jointed where possible to make it a determinate system. The stiffness analysis was essentially the formulation of a stiffness matrix from the individual structural elements combined at the modes in the same fashion as the actual elements would be assembled in the glider. This was accomplished by use of an IBM 704 digital computor program, developed at The Boeing Company, to perform analyses of large-order structural systems. The IBM 704 computor was then used to invert the stiffness matrix to obtain the influence coefficients.

VIBRATION MODES AND FREQUENCIES

The natural modes and frequencies of the glider were obtained for two conditions: (1) when the glider was mounted as a cantilever at the glider transition section interface (Figure 2); and (2) the glider free-free condition. In the analysis, fins, rudders, and elevons were assumed rigid. The elevons are hinged at the correct points so that their mass contributes to the wing motion; the fins are attached at the correct points so that their mass contributes to the wing motion. In the basic analysis, the temperature of all materials was assumed to be 70°F. A brief resume of the effect of re-entry temperatures on the aeroelastic characteristics of the glider is given in the paragraph entitled "High Temperature Effects."

The equation of motion of the cantilevered glider is

$$\left[J \right] \left\{ \ddot{\delta} \right\} + \left[k \right] \left\{ \delta \right\} = 0 \tag{1}$$

The mass distribution was approximated by assuming rigid pin-ended bars. This is illustrated by considering a single bar such as that shown in Figure 3. A and B correspond to neighboring mode points.

The kinetic energy for a single bar, AB, of length, ℓ, illustrated in Figure 3 is

$$T = \frac{1}{2} M_{AB} \left[\dot{\delta}_A - \left(\dot{\delta}_A - \dot{\delta}_B \right) \frac{\ell_{AB}}{\ell_{AB} + \ell_{BA}} \right]^2 + I_{AB} \left[\frac{\dot{\delta}_A - \dot{\delta}_B}{\ell_{AB} + \ell_{BA}} \right]^2 . \tag{2}$$

Considering the structure to be a conservative system and applying the Lagrangian differential gives the following equations:

$$\frac{d}{dt}\frac{\partial T}{\partial \dot{\delta}_A} = M_{AB}\left[\ddot{\delta}_A\left(1-\frac{\ell_{AB}}{\ell_{AB}+\ell_{BA}}\right)^2 + \ddot{\delta}_B\frac{\ell_{AB}}{\ell_{AB}+\ell_{BA}}\left(1-\frac{\ell_{AB}}{\ell_{AB}+\ell_{BA}}\right)\right] + \frac{I_{AB}}{(\ell_{AB}+\ell_{BA})^2}\left[\ddot{\delta}_A-\ddot{\delta}_B\right] \tag{3}$$

$$\frac{d}{dt}\frac{\partial T}{\partial \dot{\delta}_B} = M_{AB}\left[\ddot{\delta}_A\frac{\ell_{AB}}{\ell_{AB}+\ell_{BA}}\left(1-\frac{\ell_{AB}}{\ell_{AB}+\ell_{BA}}\right) + \ddot{\delta}_B\left(\frac{\ell_{AB}}{\ell_{AB}+\ell_{BA}}\right)^2\right] + \frac{I_{AB}}{(\ell_{AB}+\ell_{BA})^2}\left[-\ddot{\delta}_A+\ddot{\delta}_B\right]. \tag{4}$$

For the single bar, the mass-displacement matrix is

$$[J]\,[\ddot{\delta}] =$$

$$\begin{bmatrix} M_{AB}\left(1-\frac{\ell_{AB}}{\ell_{AB}+\ell_{BA}}\right)^2+\frac{I_{AB}}{(\ell_{AB}+\ell_{BA})^2} & M_{AB}\frac{\ell_{AB}}{\ell_{AB}+\ell_{BA}}\left(1-\frac{\ell_{AB}}{\ell_{AB}+\ell_{BA}}\right)-\frac{I_{AB}}{(\ell_{AB}+\ell_{BA})^2} \\ M_{AB}\frac{\ell_{AB}}{\ell_{AB}+\ell_{BA}}\left(1-\frac{\ell_{AB}}{\ell_{AB}+\ell_{BA}}\right)-\frac{I_{AB}}{(\ell_{AB}+\ell_{BA})^2} & M_{AB}\left(\frac{\ell_{AB}}{\ell_{AB}+\ell_{BA}}\right)^2+\frac{I_{AB}}{(\ell_{AB}+\ell_{BA})^2} \end{bmatrix} \tag{5}$$

The extension of the single element to the total glider gives the [J] determinate.

The determination of the natural frequencies and mode shapes was performed by the matrix iteration technique which is summarized as follows:

Assume that

$$\delta = \delta_0\, e^{i\omega t}$$

then

$$\ddot{\delta} = \omega^2 \delta_0 e^{i\omega t} = -\omega^2 \delta .$$

Equation (1) can then be rewritten

$$\omega^2 [J] \{\delta\} = [K] \{\delta\} . \tag{6}$$

Let $[K]^{-1} = [C]$ the flexible influence coefficient, then

$$\omega^2 [C] J \{\delta\} = \lceil I \rfloor \{\delta\}$$

or

$$[C] J \{\delta\} = \frac{1}{\omega^2} \{\delta\} . \tag{7}$$

Equation 7 can now be solved for ω^2 and δ by iteration. (For example see Pages 168-173 of Reference 2). The inversion of the $[K]$ matrix and the iteration were performed with the IBM 714 computor. Extension to the higher modes and frequencies can then be obtained. (For example see Page 183, Reference 2.)

The above procedure yielded the shapes and frequencies of the cantilever mode. The removal of the constraints at the cantilever points yields the shapes and frequencies of the free-free mode. This was accomplished by introducing the rigid body degrees of freedom into the equation of motion (Equation 1) by use of the transform

$$\{\delta\} = [\phi^C \ \phi^R] \begin{Bmatrix} q^C \\ q^R \end{Bmatrix} \tag{8}$$

and subsequently, premultiplying Equation 8 by $[\phi^C \ \phi^R]'$ throughout to give

$$M \begin{Bmatrix} \ddot{q}^C \\ \ddot{q}^R \end{Bmatrix} + \lceil K \rfloor \begin{Bmatrix} q^C \\ q^R \end{Bmatrix} = \{0\} \tag{9}$$

where

$$[\phi^C \ \phi^R]' [J] [\phi^C \ \phi^R] = M$$

and

$$[\phi^C \ \phi^R]' [K] [\phi^C \ \phi^R] = \lceil \omega_i^2 M \rfloor = \lceil K \rfloor .$$

The introduction of the rigid body degrees of freedom makes the matrix [K] singular and therefore the iteration technique described for the cantilever case can not be used directly. The following partitioning technique was used to overcome this difficulty. Equation 9 can be written

$$\left[\begin{array}{cc} M_1 & M_2 \\ \hline M_2' & M_3 \end{array}\right] \begin{Bmatrix} q^C \\ q^R \end{Bmatrix} + \left[\begin{array}{cc} K_1 & 0 \\ \hline 0 & 0 \end{array}\right] \begin{Bmatrix} q^C \\ q^R \end{Bmatrix} = \begin{Bmatrix} 0 \\ 0 \end{Bmatrix} . \tag{10}$$

Again, assuming harmonic motion ($q = q_0 \, e^{-i\omega t}$) and substituting into Equation 10 gives

$$-\omega^2 \left[M_1\right] \left\{q^C\right\} - \omega^2 \left[M_2\right] \left\{q^R\right\} + \left[K_1\right] \left\{q^C\right\} = \left\{0\right\} \tag{11a}$$

$$-\omega^2 \left[M_2\right]' \left\{q^C\right\} - \omega^2 \left[M_3\right] \left\{q^R\right\} = \left\{C\right\} . \tag{11b}$$

Equation 11b can be rewritten to yield rigid body q^R's in terms of the cantilevered q^C's.

$$q^R = - \left[M_3\right]^{-1} \left[M_2\right]' \left\{q^C\right\} . \tag{12}$$

By substituting Equation 12 into Equation 11a we obtain

$$\left[K_1\right] \left\{q^C\right\} - \omega^2 \left[\left[M_1\right] - \left[M_2\right] \left[M_4\right]^{-1} \left[M_3\right]\right] \left\{q^C\right\} = \left\{0\right\} , \tag{13}$$

which can be written in a form for iteration

$$\left[K\right]^{-1} \left[\left[M_1\right] - \left[M_2\right] \left[M_4\right]^{-1} \left[M_3\right]\right] \left\{q^C\right\} = \frac{1}{\omega^2} \left\{q^C\right\} . \tag{14}$$

After iteration, the free-free natural frequencies and mode shapes in the form $\{ q^{C(i)} \}$ are obtained. The $\{ q^{R(i)} \}$ is obtained by use of Equation 12, and the two combined to form the $\{ \begin{smallmatrix} q^c \\ q^R \end{smallmatrix} \}$ contribution. This, substituted into Equation 12 and normalized, gives the normalized free-free mode shape.

GLIDER FLUTTER ANALYSIS

The glider flutter analysis for the final structural configuration of the X-20 had not been completed at the termination of the Dyna-Soar program. Preliminary studies were made. Reference 1 describes these studies and the formulation of the flutter equations. The development is of the modal type using aerodynamic forces developed from second order piston theory for the supersonic regime and quasi-steady techniques for the subsonic case. The development employed the following degrees of freedom:

1. First five wing and body cantilevered modes (symmetric and antisymmetric);
2. First two lateral and first vertical fin cantilever modes;
3. Elevon rotation;
4. Rudder rotation;
5. Rigid glider modes.

The final flutter matrix as developed in Reference 1 is

$$\left[-(\phi' J \phi) + (\phi' J \phi)_i \, \omega_i^2 \lambda + (\phi_A' A \phi_A) \right] \{q\} = 0 . \tag{15}$$

This equation can be solved for the λ's (eigenvalues) and the q's (eigenvectors). The eigenvalues are used to determine the frequencies and the damping required for stability. The Mach number, at which flutter occurs, is determined as a function of an altitude and a velocity from the reduced flutter parameter $k = \frac{b\omega}{V}$. Reference 1 contains the results obtained from these studies that were completed at the time of contract termination.

GLIDER FLUTTER MODEL

Since the state-of-the-art of flutter analysis did not afford a means of determining the flutter characteristics of a flight vehicle in the transonic flight regime, and since it was considered highly desirable to verify analytical procedures to the greatest extent possible, a one-fourth scale model was constructed. The replica was tested in the 16-foot transonic tunnel at the Arnold Engineering Center to establish transonic flutter boundaries and to verify the analytical procedures. Structural evolution made this model obsolete before the flutter analysis was completed. A later analysis and correlation of this model was not completed prior to the termination of the X-20 program.

A description of the tests to which this model was subjected and the results obtained are given in Reference 3. These data are classified as of this writing and, therefore, are not discussed in this report.

A one-fifth scale structural replica of the flutter model, using the final structural configuration, was to have been tested in the transonic Mach regime. These data would have been used to achieve those objectives of the original test that were not realized. The design and fabrication of this final flutter model had not been started when the program was terminated.

HIGH TEMPERATURE EFFECTS

The high temperatures associated with the re-entry process posed some special considerations when related to the X-20A. The heating of the primary structure would necessarily adversely affect the modulus of elasticity and hence the stiffness of the glider. Additionally, the considerably different heating rates between the upper and lower glider surfaces introduced a nonuniform deformation of members and, in effect, a new structural shape to the glider. The impact of these thermally-induced changes was important to both the flutter analysis and the flight control compensation for the flexible vehicle.

A preliminary computation of glider mode shapes and frequencies was made in the regime of maximum primary-structure temperatures. There was little indication of mode-shape changes. Primary structural frequencies, which were in the order of 5 cps in the cold configuration, were shifted downward about 9 percent. The effects of these frequency changes did not appear to have a serious impact on the compensations for the flight control system. However, more definitive analyses were planned after the structure was finalized. These were not accomplished prior to termination of the program.

The preliminary flutter study indicated a high margin of safety when the cold configuration for very high (re-entry) Mach numbers were analyzed. The maximum heating regime was expected to occur at very low dynamic pressures (less than 10 psf). Thus, the tendency to flutter at maximum re-entry structural temperatures was not considered too important. Rather, the plan was to investigate the regime where $(\frac{q}{E_t})$ was maximum, that is, the regime where the ratio of dynamic pressure to elastic modulus at temperature was maximum. This was to be done by examining a number of points on the glider structure along a re-entry trajectory. Plots of the ratio q/E_t with time would indicate the trajectory condition to be examined. The temperature distribution at this condition was then to be used to obtain the reduced stiffness. If temperature gradients were large, a new stiffness distribution was to have been computed. The revised stiffnesses were then to have been used to determine mode shapes and frequencies and, in turn, in a flutter analysis for the elevated temperature conditions.

In a similar treatment of an earlier structural configuration, it was found that $(q/E_t)_{max}$ occurred at about the same trajectory condition in each case. These earlier calculations indicated that mode shapes were changed so little that the revised flutter analysis only took into consideration uniform variations in natural frequencies.

GROUND VIBRATION TEST

The ground vibration test for the X-20A had a unique quality that makes it worthy of mention although it had not reached more than the preliminary planning stage. A full-scale production model of the glider was to have been cantilevered in exactly the same fashion as the mathematical model. This form of constraint would have removed any lingering doubts about support interference in the vibration test. Generally it has not been possible to both analyze and test a flight vehicle having identical restraints. This may well have been the first time this would have been possible. The determination of semi-empirical free-free modes and frequencies would have required merely the mathematical removal of the cantilever restraints after the cantilever modes and frequencies had been adjusted to fit the test data.

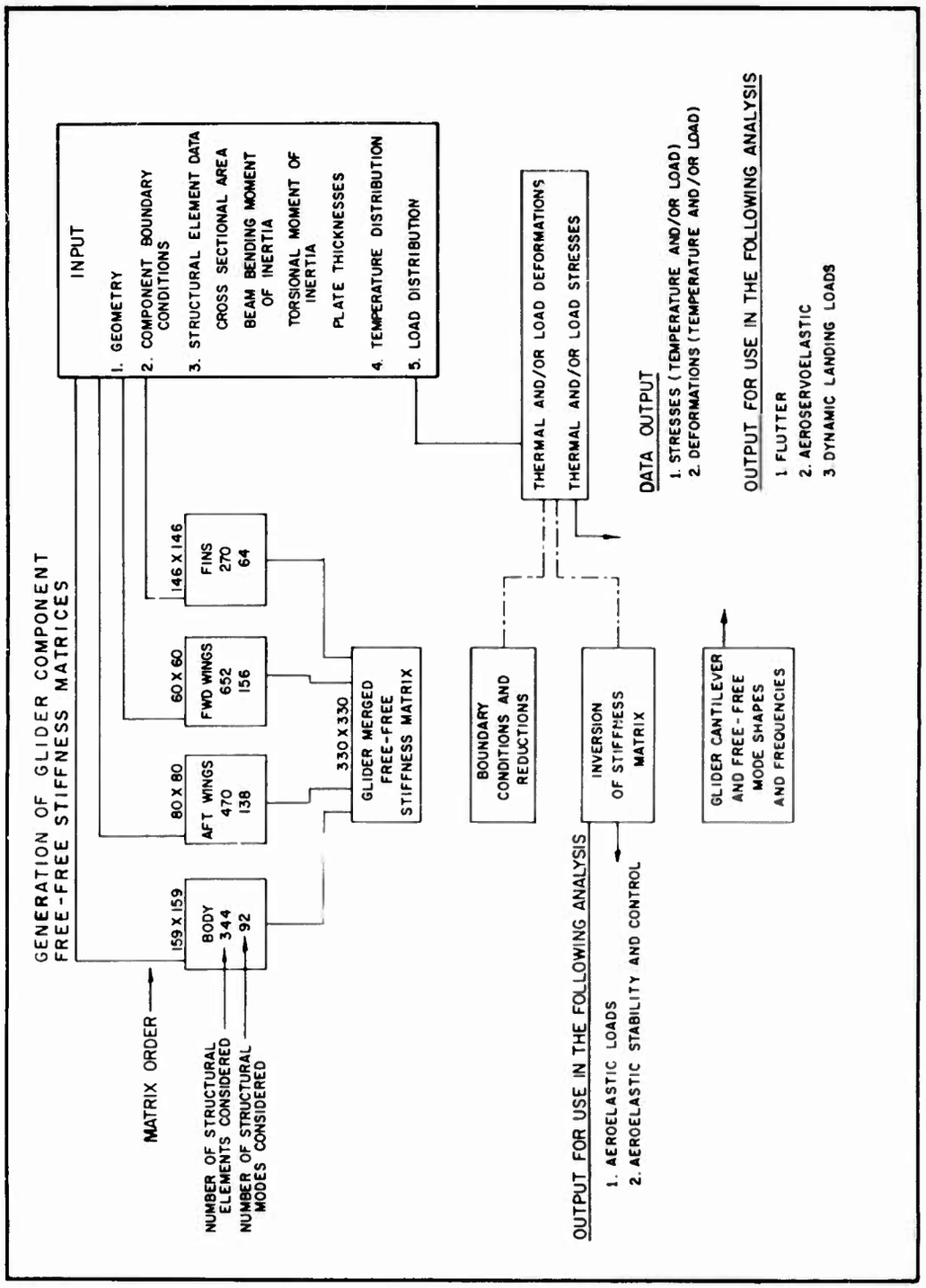
GENERATION OF GLIDER COMPONENT FREE-FREE STIFFNESS MATRICES
INPUT
1. GEOMETRY
2. COMPONENT BOUNDARY CONDITIONS
3. STRUCTURAL ELEMENT DATA
CROSS SECTIONAL AREA
BEAM BENDING MOMENT OF INERTIA
TORSIONAL MOMENT OF INERTIA
PLATE THICKNESSES
4. TEMPERATURE DISTRIBUTION
5. LOAD DISTRIBUTION
MATRIX ORDER
NUMBER OF STRUCTURAL ELEMENTS CONSIDERED
NUMBER OF STRUCTURAL MODES CONSIDERED
159 X 159
BODY
344
92
80 X 80
AFT WINGS
470
138
60 X 60
FWD WINGS
652
156
146 X 146
FINS
270
64
330 X 330
GLIDER MERGED FREE-FREE STIFFNESS MATRIX
BOUNDARY CONDITIONS AND REDUCTIONS
INVERSION OF STIFFNESS MATRIX
GLIDER CANTILEVER AND FREE-FREE MODE SHAPES AND FREQUENCIES
THERMAL AND/OR LOAD DEFORMATIONS
THERMAL AND/OR LOAD STRESSES
DATA OUTPUT
1. STRESSES (TEMPERATURE AND/OR LOAD)
2. DEFORMATIONS (TEMPERATURE AND/OR LOAD)
OUTPUT FOR USE IN THE FOLLOWING ANALYSIS
1. FLUTTER
2. AEROSERVOELASTIC
3. DYNAMIC LANDING LOADS
OUTPUT FOR USE IN THE FOLLOWING ANALYSIS
1. AEROELASTIC LOADS
2. AEROELASTIC STABILITY AND CONTROL

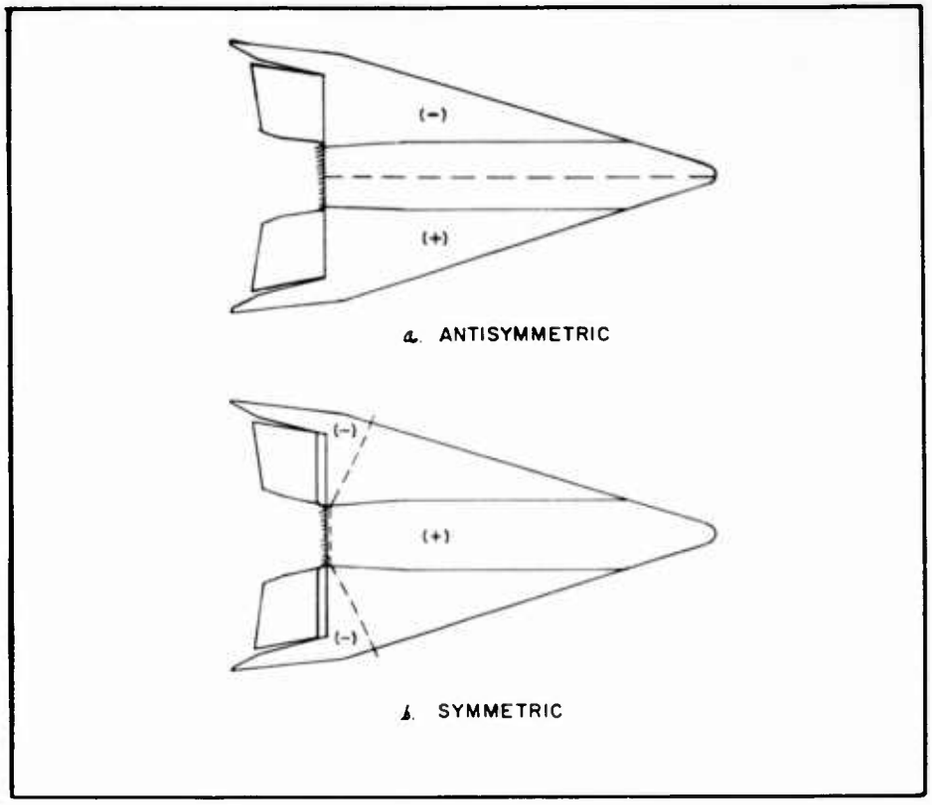

Figure 2. Typical Cantilever Mode of Glider

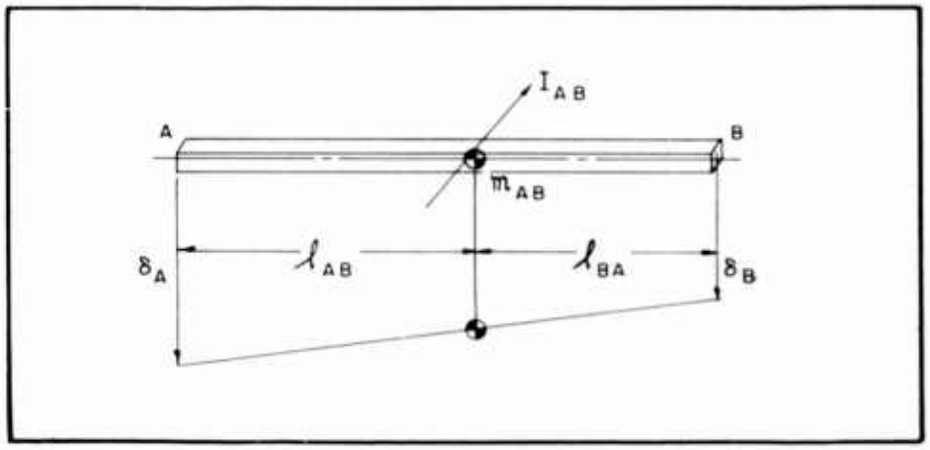

Figure 3. Single Element Mass Distribution

SECTION 3

CONTROL SURFACE SINGLE-DEGREE-OF-FREEDOM FLUTTER (BUZZ)

Single-degree-of-freedom flutter, or buzz, is a flutter of limited amplitude involving the oscillation of a control surface about its hinge line. This phenomenon has occurred from time to time in various aircraft operating at, or near, transonic Mach numbers. The phenomenon is generally attributed to standing shock waves in the vicinity of control surfaces. In theory, the waves are oscillating so as to feed energy to the control surface. If the control surface frequency about its hinge line is at or near the frequency of the moving shock wave, a limited-amplitude flutter will occur. The frequency of the control surface is a function of the actuator stiffness and the torsional or windup frequency of the surface. The danger, in addition to fatigue failure from the occurrence of buzz, is the possible coupling with some significant structural frequency in the wing or fin that will lead to a destructive flutter.

Some special considerations concerning control surface buzz evolved in the X-20A development. Historically, this type of flutter has not received the attention, from the point of view of developing a sound analytical design criteria for predicting its occurrence, that other, perhaps more destructive forms of flutter, have received. The original design criteria for the X-20, as proposed by the contractor, was that the control surface and actuator stiffnesses would be designed so that the non-dimensional buzz criteria, k_B, would be

$$k_B = \frac{b\omega}{a} < 0.21 \tag{16}$$

This equation, derived from empirical data developed at Wright Field some years ago (documentation supporting this equation is no longer available), can not be considered as guaranteeing freedom from buzz, although it is currently in wide use in the United States aircraft industry and is recognized as a useful tool for estimating preliminary design requirements necessary to prevent buzz. Equation 16 was not originally intended for use as a design criteria.

The current military specification (Paragraph 3.2.7, Reference 4) requires the system contractor to provide a means of attaining space and strength for the later installation of dampers if their use becomes necessary. At present, there is no damper system that can operate in the expected X-20 environment without some form of cooling system. However, the weight of such a system and other "plumbing" considerations made the employment of a cooling system undesirable. In addition, the attainment of $k_B < 0.21$ posed a significant weight penalty when compared to the weight associated with a stiffness dictated by sufficient strength to support designed control surface loads. The contractor, therefore, was directed to design the actuator installation so that actuator stiffness could later be greatly increased with a minimum of difficulty. Control surface and actuator stiffnesses were to be designed initially to meet only strength requirements. In addition, the contractor was directed to conduct a buzz test to verify that the stiffnesses dictated by "strength considerations only" were sufficient to prevent buzz, or determine what additional stiffnesses would have to be incorporated into X-20A control surface design. As previously mentioned, this design was to have been amenable to further stiffening if this should be indicated by the buzz test or from later flight tests.

A number of flight tests were planned during which the X-20A would be released from a B-52 bomber. In some test flights, the glider was to have been boosted to supersonic speed by the auxiliary rocket that normally separates the glider from the booster in the

event of an aborted boost. These flights would have been used in conjunction with the buzz model to verify that the design of the glider was adequate to assure freedom from buzz.

The buzz model was to have been a one-fifth scale full configuration of the X-20A and glider transition section. The test was scheduled for the 16-foot Langley Transonic Dynamics Tunnel.

Control surface buzz is dependent upon the energy derived from boundary layer. For this reason, Reynolds number matching is more important than in the usual flutter model. The choice of a one-fifth scale model was a compromise between eliminating wind tunnel distortion (small model) and preserving Reynolds number matching (full scale). The following variables were to have been tested:

Variable	Range (full scale)	No. of Values
Elevon rotational frequency	10-25 cps	5
Rudder rotational frequency	20-50 cps	5
Elevon windup frequency	20-30 cps	2 flexible 1 rigid
Rudder windup frequency	25-60 cps	4 flexible 1 rigid
Elevon and rudder free-play	0.22-2.00 Trailing edge travel to chord ratio in %	3

Although this test was not completed, this model is being considered for use in future tests to be made by the AF Flight Dynamics Laboratory to further the development of criteria.

SECTION 4

PANEL FLUTTER

DESIGN

The X-20A glider was designed to withstand very high temperatures and the attendant thermal gradients associated with re-entry space vehicles. To cope with this problem, the glider required skin panels capable of preventing high thermal stresses. This resulted in the employment of an orthotropic skin panel.

The panel consisted of a thin-gage corrugated sheet of Rene alloy with a continuous outer skin or heat shield of suitable metal. The lower surface panels each contained a layer of insulating material, consisting of stabilized Q-felt between the corrugated René sheet and the refractory heat shield. The typical final panel configuration was 12 inches by 45 inches. These typical panels are shown in Figures 4 and 5.

Figures 6 and 7 indicate application of various types of panels. To relieve thermal gradients, the corrugations are, in general, normal to the air flow. This presented a special problem in panel flutter for it is well understood that the panels are much stiffer in the direction of corrugation. After development had progressed, it became apparent that thermal gradients were less severe than originally supposed. However, it was determined that no significant weight saving could be achieved by reorienting the panel corrugations. In addition, the original concept offered a more conservative design than one employing parallel flow. If the skin panels could be qualified for use with the panels normal to the flow, any variation of flow from that which was expected would not adversely affect the panels from a flutter consideration, but, on the contrary, would improve their reliability.

DEVELOPMENT

The development of X-20 panels was essentially an empirical process. However, techniques of analysis were developed that were useful in the supersonic Mach regime. Nonetheless, the critical Mach regime was in the transonic regime, which does not lend itself to analytical procedures. This was especially true since the expected transonic dynamic pressures would be relatively high during boost. Reference 5 discusses the experimental aspects of the development of X-20A panels. References 6, 7, 8, and 9 contain the data that have been gathered in this development.

The panel-development program was divided into two phases: the first phase was designed to probe the extent and seriousness of panel flutter; and the second phase was designed to develop usable skin panels. There was little or no data available on the use of orthotropic panels.

The results of the first phase of testing did prove that a serious problem existed. In the second phase, a consideration of costs dictated a parametric approach. Experiments were conducted that explored, along with other parameters, the effects of the following: length-to-width ratio; gage thickness; use of various stiffnesses; types and spacing of corrugations; edge restraints; and flow direction on flutter (Figure 8). A heated panel test was conducted to determine the effect that the reduced stiffness expected from re-entry temperatures would have on panel flutter.

The application of temperature had the effect of increasing the flutter dynamic pressure. This is attributed to the out-of-plane deformation of the panel which gave the panel an increased effective thickness that more than overcame the effect of modulus degradation.

A flight test of X-20 panels is planned. In the test, an F-104 aircraft, specially modified by the NASA Flight Research Center at Edwards AFB, California, will be used. This test will correlate free stream data with 800 hours of wind tunnel data obtained in the development tests. In addition, the small regime between Mach 1.36 and Mach 1.55, which was not tested in the wind tunnels, will be investigated. This small data gap stems from the lack of overlap between the transonic and supersonic wind tunnels used. Although the critical area, or "flutter bucket," occurred in the vicinity of this gap, extrapolation from both sides indicated that the final X-20 panels exceeded the required margin of 1.32 of the dispersed boost dynamic pressure. A graphical illustration of the development progress of X-20 panels is shown qualitatively in Figure 9.

ANALYTICAL TECHNIQUES

A full documentation of analytical techniques for predicting panel flutter has not been accomplished. Reference 1 contains some discussion of the techniques employed. A documentation of analytical techniques and correlation with test results is in progress by the Boeing Company. The technique employed is similar to that for glider flutter. The aerodynamics are obtained from piston theory for Mach numbers above two. A supersonic Mach Box theory was used for the 1.2 to 2 Mach range. Best results were obtained by using experimentally determined frequencies with calculated mode shapes.

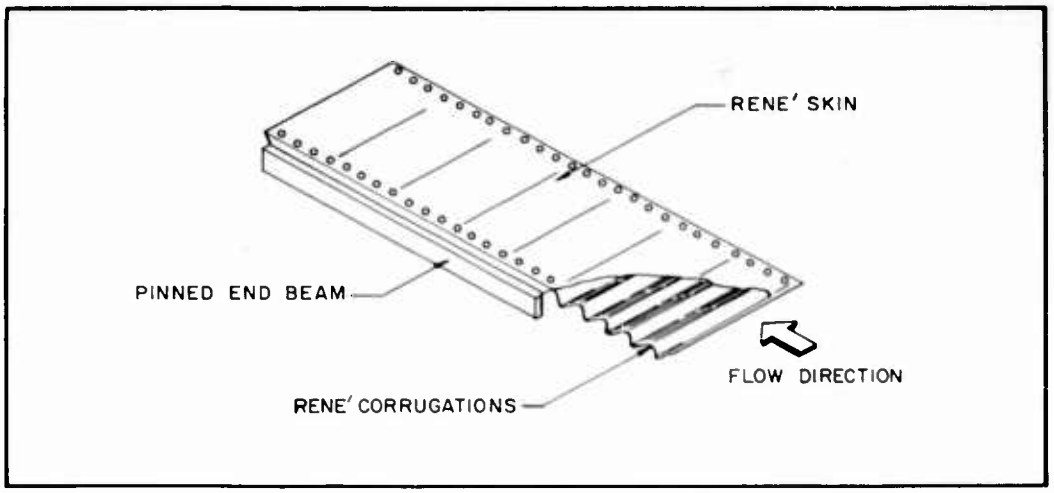

Figure 4. Typical Uninsulated Panel

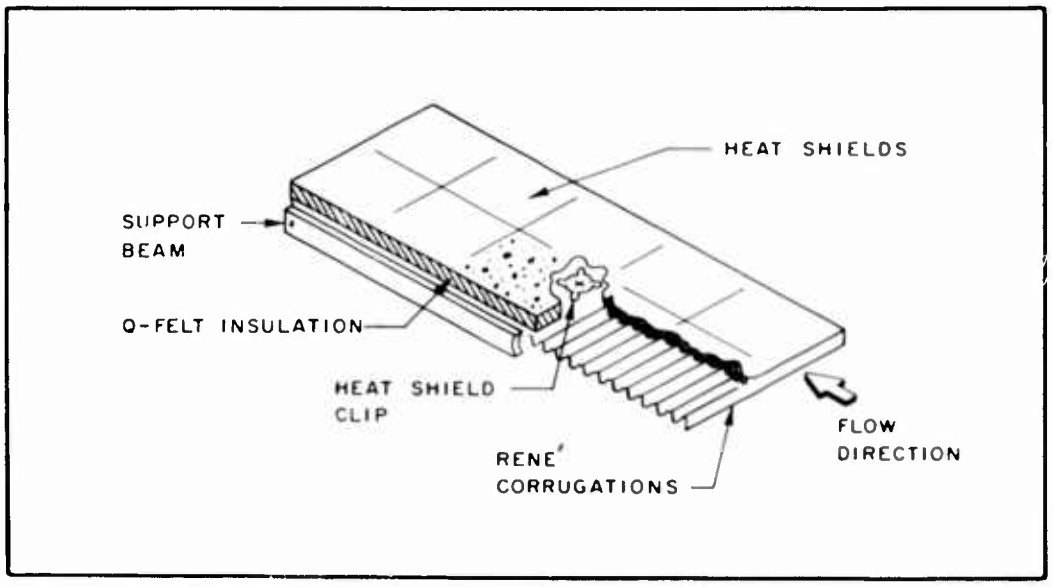

Figure 5. Typical Insulated Panel

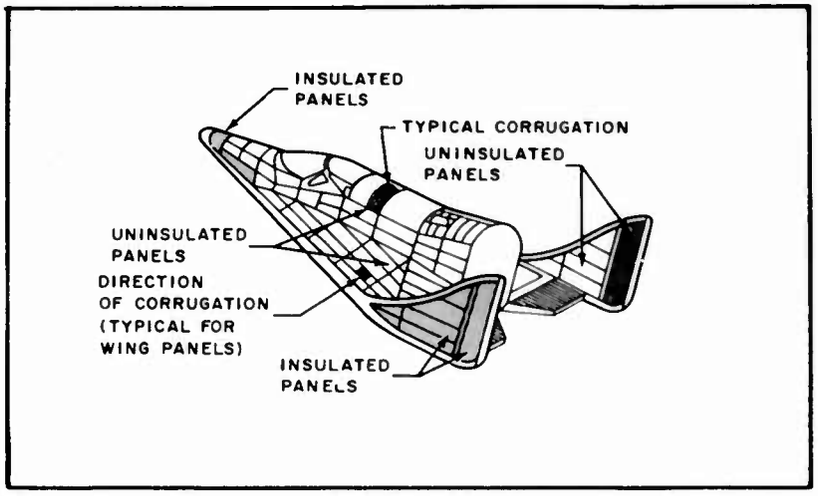

Figure 6. Upper Locations of Insulated and Uninsulated Panels

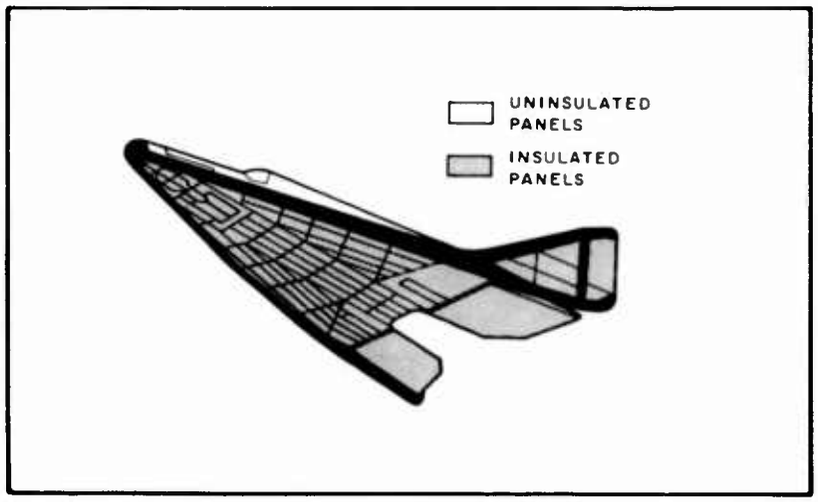

Figure 7. Lower Locations of Insulated and Uninsulated Panels

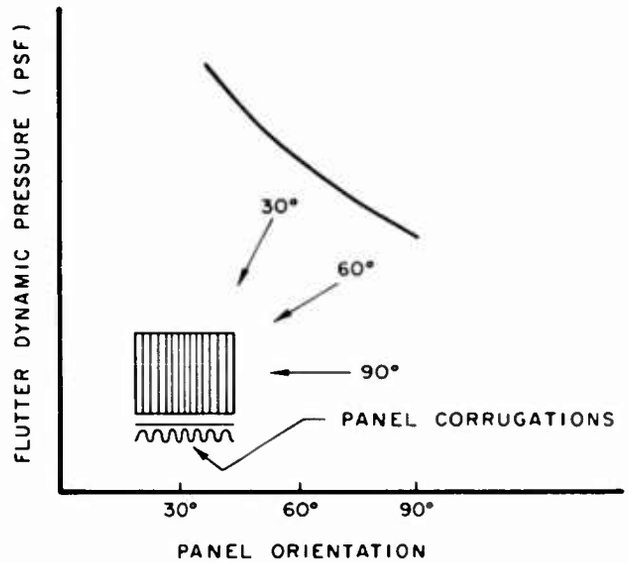

Figure 8. Panel Orientation Effect

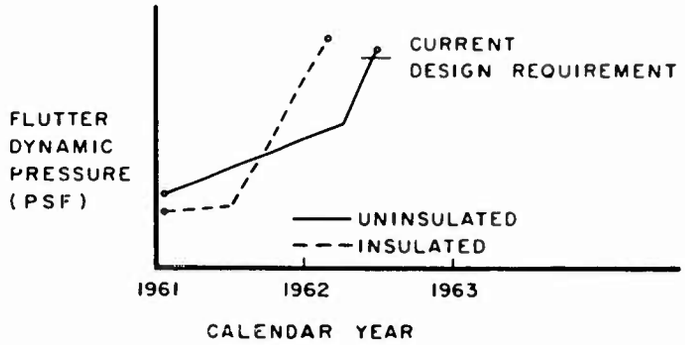

Figure 9. Development of X-20A Skin Panels

SECTION 5
AIR VEHICLE FLUTTER

TITAN I

The 1960 Dyna-Soar plan consisted of a sub-orbital mission to be effected by launching the glider on a Titan I booster. The air vehicle configuration would have included fins to achieve directional stability. A preliminary vibration and flutter analysis was made of this configuration and is reported in Reference 7. Of particular interest in this report is the effect of using an equivalent beam analogy for the glider or truss structure. This technique was used to allow more flexibility in handling the changes in fuel weights. The agreement obtained for the first three mode shapes by a more rigorous treatment of the composite truss-beam glider-booster structure for the initial weight conditions was considered adequate for the preliminary investigation. Frequencies were in agreement to within 5 percent.

The solution of the flutter problem was accomplished by an analog computor. The wiring diagrams of the computor are included in Reference 7. Constraints employed in the solution were as follows:

a. Rigid body pitch plane motion (pitch and translocation 2 degrees of freedom);

b. Centerline pitch plane, elastic deformations of glider, transition and booster (12 degrees of deformation);

c. Booster pitch fin bending and torsion (8 degrees of deformation);

d. First fuel slosh mode in each tank (4 degrees of freedom);

e. Engine rotation and servo displacement (1 degree of freedom).

The aerodynamic forces were represented by a quasi-steady technique from experimentally derived curves included in Reference 7. The problem was solved for the ON and OFF conditions of the flight control system.

TITAN II

Although the program was redirected to a Titan II booster in late 1961, no analytical work of significance was completed for this booster. Titan I data were considered to be sufficient for trend information until the air vehicle structure was defined.

TITAN III

When the X-20 program was redirected to include orbital flight, the booster was changed to the Titan III (Figure 10). Although originally this configuration included fins, these were later deleted. The omission of fins largely eliminated any potential flutter problem for the air vehicle. A tentatively planned flutter model wind tunnel test was considered unnecessary and was eliminated. A planned updating of the vibration analysis of the later configuration had not been initiated at the cancellation of the X-20 program.

ONE-FIFTH SCALE GROUND VIBRATION SURVEY

The ground vibration survey has become a traditional and vital source of data for checking vibrational analysis on flight systems. However, the large booster flight systems, presently appearing on the scene, are of such mass that full-scale vibration tests are very expensive. The Titan IIIC with Dyna-Soar would have weighed well over one million pounds. The problem of constructing a mounting base to support this weight and also maintain a large frequency separation between the base and the air vehicle is formidable. The X-20A and Titan III SPO's, with their respective system contractors, determined to use a one-fifth scale structural replica of the X-20A/Titan IIIC vehicle for such a test. The NASA has used a one-fifth scale ground vibration test of the Saturn with apparently good results. The X-20A/Titan IIIC test was to be conducted at NASA Langley Research Center to make use of the Saturn experience.

The X-20 program was terminated before this test could be completed. The X-20A scale model is now complete and is a replica except for skin panels, the mass of which are simulated at the element nodes. A planned analysis and calibration of the glider model only will be correlated against the glider analysis previously discussed. Tests of the Titan III model with other payloads are being conducted.

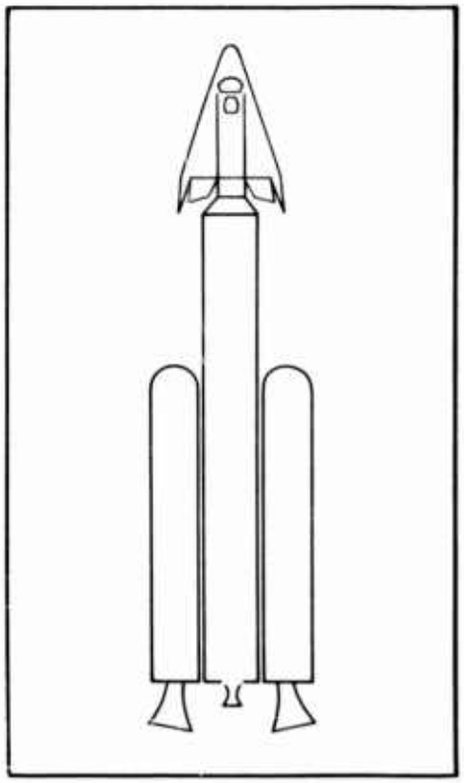

Figure 10. X-20A/Titan IIIC Air Vehicle

SECTION 6
CONCLUSIONS AND RECOMMENDATIONS

CONCLUSIONS

Development Status At Termination of Program

At the termination of the program, the aeroelastic program for the X-20A had not reached the state at which it could be termed qualified in relation to flutter. However, the following statements can be made.

a. The X-20A glider surface flutter studies had progressed to the extent that the glider was not considered to have a flutter problem.

b. The orthogonal skin panels for the X-20A were essentially qualified for all expected flight regimes.

c. No conclusions can be reached as to the likelihood of control surface buzz. The stiffnesses for rudder surface and actuator were such that buzz would not be entirely unexpected. This was also true to a lesser extent for the elevons. In the event tests indicated that a buzz problem existed, the design could be modified rather simply, although there would be an accompanying weight penalty.

d. The air vehicle (X-20A/Titan III) had not been completely analyzed aeroelastically at contract termination. The elimination of fins from the design of the air vehicle virtually eliminated any air vehicle flutter problem.

Advancements in the State-of-the-Art

The high temperatures associated with the re-entry of the X-20A vehicle did not appear to offer directly any great problems in relation to aeroelasticity. The most significant effect was a shift of structural frequencies. These frequencies were of most concern to the designers of the flight control systems electronics. In general, shifts did not appear to be sufficient to invalidate the electronic compensation designed for them in the flight control systems electronics. The indirect effects of high temperatures in dictating structural design in skin panels and control surface stiffnesses were of great significance, as has been discussed. Although the unusual truss arrangement used for the primary structure was a challenge, mainly because of the large number of members involved, no new analytical techniques were required.

The major advancement in the field of aeroelasticity was the development of orthotropic skin panels. The development of these panels and the associated analytical techniques should be of value to designers of future re-entry or hypersonic vehicles.

The one-fifth scale ground vibration test may be of great value in estimating the use of scale models for dynamic testing of large and unwieldly structures. This program element has not reached a stage of development at this writing that makes possible an assessment of its contribution.

RECOMMENDATIONS

More adequate design criteria are needed for the prevention of control surface buzz for winged re-entry vehicles. Because of the problems of environmental cooling, adequate actuator and control surface stiffness to prevent buzz appears preferable to employing dampers. Weight considerations dictate that this stiffness be optimized to the minimum necessary to prevent buzz. Current criteria are not adequate to meet these opposing objectives.

REFERENCES

1. Preliminary Vibration and Flutter Analysis Report – Glider. Boeing Document D2-8123-1. The Boeing Company, Seattle, Washington. September 1961.

2. R. Rosenbaum and R. H. Scanlan. Introduction to the Study of Aircraft Vibration and Flutter. The Macmillan Company, New York. 1951.

3. E. S. Gull and D. J. Spring. Aero-elastic and Flutter Tests of The Boeing Dyna-Soar at Transonic Speeds. AEDC-TN-59-83. Arnold Engineering Center, Tullahoma, Tennessee. August 1959.

4. Military Specification, Airplane Strength and Rigidity, Vibration, Flutter, and Divergence. MIL-A-8870 (ASG). 18 May 1960.

5. [redacted]

6. Flutter Test Results of Corrugation-Supported Skin Panels. Boeing Document D5-4716. The Boeing Company, Seattle, Washington. January 1961.

7. Preliminary Skin Flutter Test. Boeing Document D2-8148. (SPO Nos. 57, 58). AD 375D-2,3. The Boeing Company, Seattle, Washington. 1 March 1962.

8. Skin Panel Flutter Test, Refine I. Boeing Document D2-80641. (SPO No. 184). AD-375D-4. The Boeing Company, Seattle, Washington. October 1962.

9. Transonic, Supersonic Panel Flutter Test. Boeing Document D2-81095. (SPO No. 59). AD-375D-5. The Boeing Company, Seattle, Washington. January 1964.

10. Preliminary Vibration and Flutter Analysis Report-Air Vehicle, Boeing Document D2-8123-2. The Boeing Company, Seattle, Washington. September 1961.